ＴＳＡ－１０２Ｎ／Ｓ
Imaging/Visual System Chart (TX)

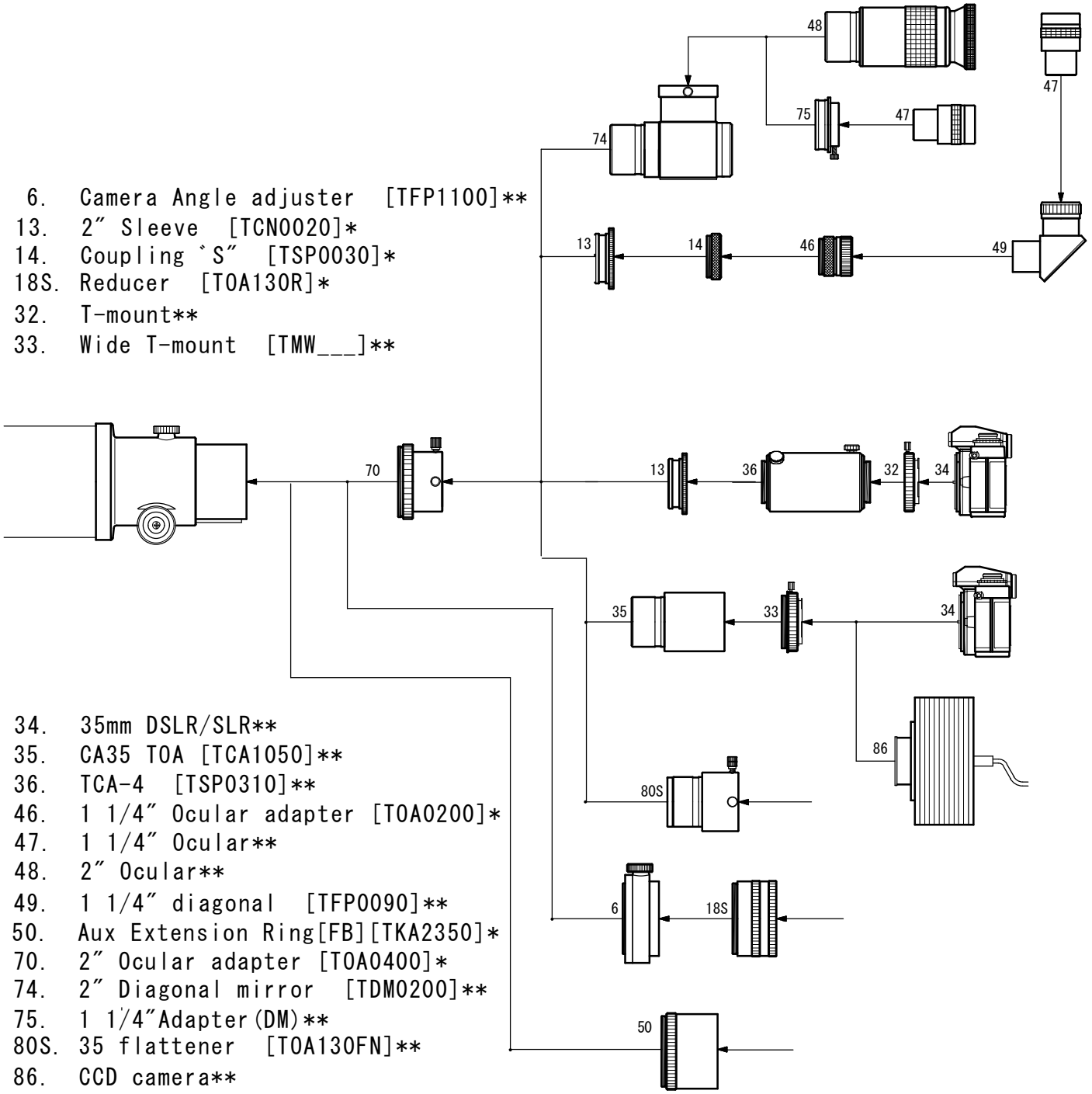

6. Camera Angle adjuster [TFP1100]**
13. 2″ Sleeve [TCN0020]*
14. Coupling ˋS″ [TSP0030]*
18S. Reducer [TOA130R]*
32. T-mount**
33. Wide T-mount [TMW___]**
34. 35mm DSLR/SLR**
35. CA35 TOA [TCA1050]**
36. TCA-4 [TSP0310]**
46. 1 1/4″ Ocular adapter [TOA0200]*
47. 1 1/4″ Ocular**
48. 2″ Ocular**
49. 1 1/4″ diagonal [TFP0090]**
50. Aux Extension Ring[FB][TKA2350]*
70. 2″ Ocular adapter [TOA0400]*
74. 2″ Diagonal mirror [TDM0200]**
75. 1 1/4″Adapter(DM)**
80S. 35 flattener [TOA130FN]**
86. CCD camera**

* Standard with OTA
** Optional Item