ＦＳＱ－８５ＥＤＸ

Extender ED 1.5x System Chart

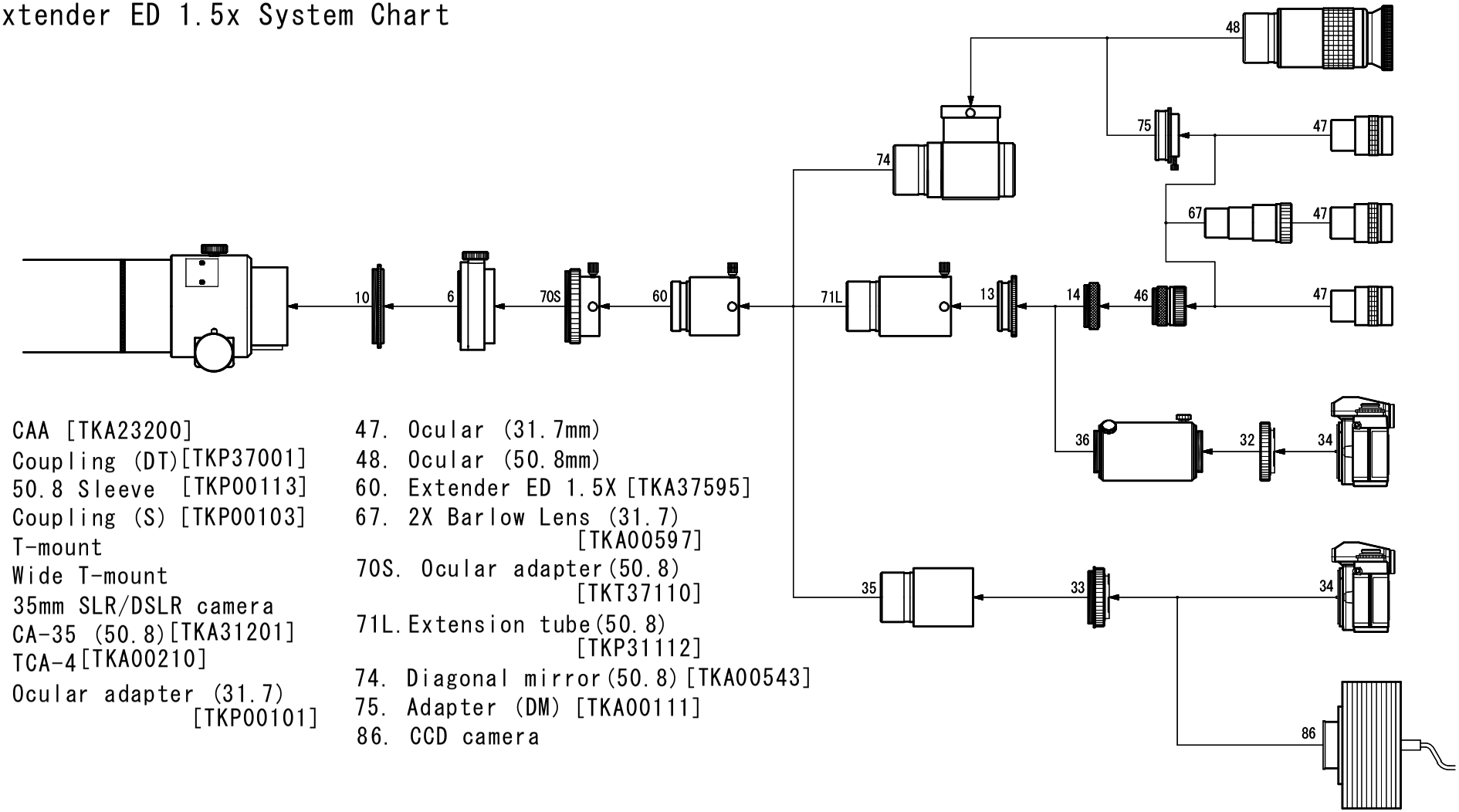

6. CAA [TKA23200]
10. Coupling (DT)[TKP37001]
13. 50.8 Sleeve [TKP00113]
14. Coupling (S) [TKP00103]
32. T-mount
33. Wide T-mount
34. 35mm SLR/DSLR camera
35. CA-35 (50.8)[TKA31201]
36. TCA-4[TKA00210]
46. Ocular adapter (31.7) [TKP00101]
47. Ocular (31.7mm)
48. Ocular (50.8mm)
60. Extender ED 1.5X [TKA37595]
67. 2X Barlow Lens (31.7) [TKA00597]
70S. Ocular adapter(50.8) [TKT37110]
71L. Extension tube(50.8) [TKP31112]
74. Diagonal mirror(50.8)[TKA00543]
75. Adapter (DM) [TKA00111]
86. CCD camera