ＴＳＡ－１０２Ｎ／Ｓ

35-Flattner System Chart(TX)

13. 2" Sleeve[TCN0020]*
14. Coupling "S"[TSP0030]*
32. T-mount**
33. Wide mount T-adapter [TMW___]**
34. 35mm DSLR/SLR **
35. CA-35 2" [TCA1030]**
36. TCA-4 [TMP0310]**
46. 1 1/4" Ocular adapter[TOA0200]*
47. 1 1/4" Ocular**

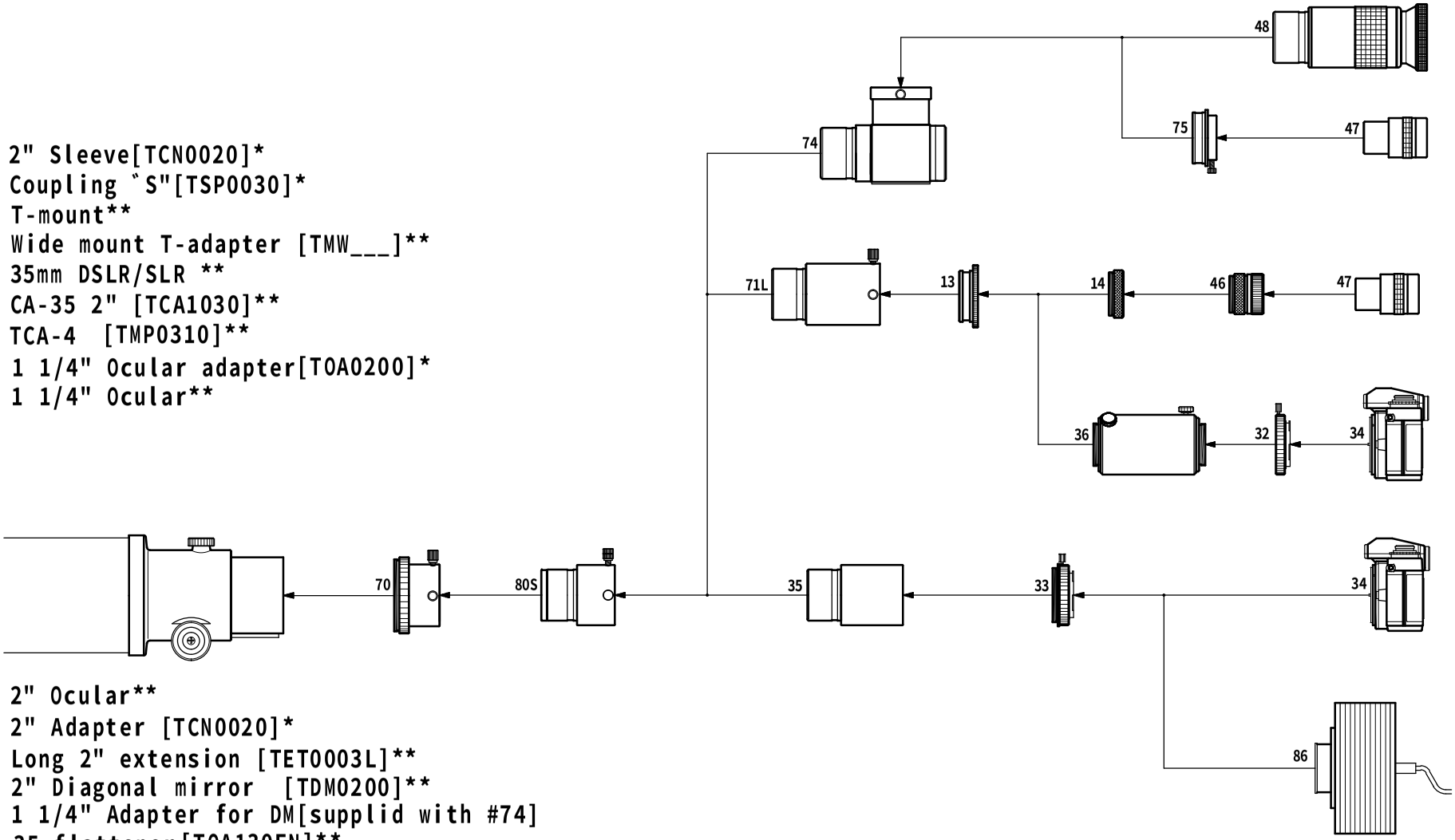

48. 2" Ocular**
70. 2" Adapter [TCN0020]*
71L Long 2" extension [TET0003L]**
74. 2" Diagonal mirror [TDM0200]**
75. 1 1/4" Adapter for DM[supplid with #74]
80S 35 flattener[TOA130FN]**
86. CCD camera**

* Standard with OTA
** Optional Item