FC-76DC
Photo/Visual System Chart
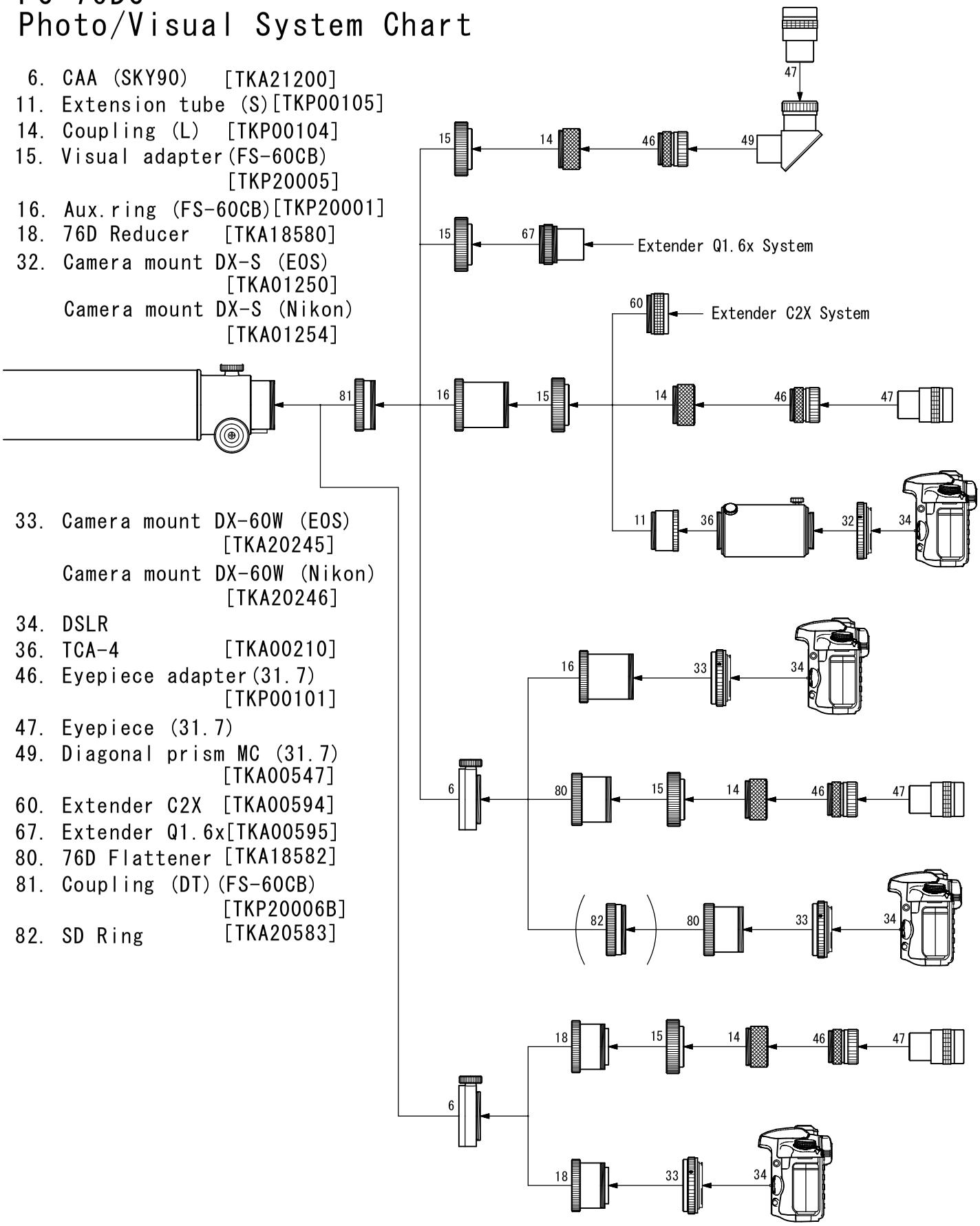
6. CAA (SKY90) [TKA21200]
11. Extension tube (S)[TKP00105]
14. Coupling (L) [TKP00104]
15. Visual adapter(FS-60CB) [TKP20005]
16. Aux.ring (FS-60CB)[TKP20001]
18. 76D Reducer [TKA18580]
32. Camera mount DX-S (EOS) [TKA01250]
    Camera mount DX-S (Nikon) [TKA01254]
33. Camera mount DX-60W (EOS) [TKA20245]
    Camera mount DX-60W (Nikon) [TKA20246]
34. DSLR
36. TCA-4 [TKA00210]
46. Eyepiece adapter(31.7) [TKP00101]
47. Eyepiece (31.7)
49. Diagonal prism MC (31.7) [TKA00547]
60. Extender C2X [TKA00594]
67. Extender Q1.6x[TKA00595]
80. 76D Flattener [TKA18582]
81. Coupling (DT)(FS-60CB) [TKP20006B]
82. SD Ring [TKA20583]